TIS RADAR SENOR

Celling Mount Occupancy Sensor

Data Sheet Rev 3.1

Model: OS-MMV2-IC



OVERVIEW

The Tis Radar Sensor is designed for applications where occupancy detection is essential. It can also be programmed to optimize energy consumption.

Equipped with a 24 GHz radar sensor and a lux sensor, it measures light intensity (lux) and enables customized lighting control.

KEY BENEFITS

- Real Occupancy Monitoring
- Saving Energy in unoccupied room.
- Turn on lights If motion detected in dark areas.
- Monitor room temperature

KEY FEATURES

- Ceiling flush-mount with high coverage
- 24GHz Millimeter Wave Radar
- 8 Lines of saving energy Logic
- Works with TIS-BUS Protocol



BARCODE (UPC-A)

6 06795 20879 1

TIS RADAR SENOR

Celling Mount Occupancy Sensor

Model: OS-MMV2-IC



PRODUCT SPECIFICATIONS			
	Input	Wave Radar	24GHz Millimeter Wave Radar
		Light intensity	Lux meter 0-5000 Lux
		Temp sensor	Resistance Temp sensor
TISBUS	**TIS BUS**	Number of devices on 1 line	Max. 64
		Bus voltage	12-32 V DC
		Current consumption	<15 mA / 24 V DC
	PIR Detection	Antenna range	5-6 meters (installation height 2.6 - 3 meters)
		Antenna angle	65° from the celling down
	Protection		Reverse Polarity Protection
	Reaction time		approx. 20ms
	Mounting	Celling mount	Flush mount
	Connection terminal	Data / bus	terminal connector 0,25…2mm2
	Operation	Programming button	For assignment of the physical address
		Indicator LED	Blue or Red LED (optional)
		TIS bus	TIS Protocol massages and commands
	Functions	Movement /No Movement Logic	20 commands on movement action
		Occupancy No Occupancy Logic	20 commands on occupancy action
		Light intensity	20 commands on light intensity action
		Timer	Timer based for saving energy
	Weight	Without packaging	50 g
	Dimensions	Length × Width × Height	60mm × 60mm × 38mm
	Housing	Materials	ABS anti fire / PC anti fire
		Casing color	White
		IP rating	IP 20
	Temperature range	Operation	-10…60°C
		Storage	-20…50°C
		Transport	-25…75°C
	Air humidity		<85% non-condensing

Copyright © 2025 TIS, All Rights Reserved
TIS Logo is registered trademark of TIS CONTROL.
All of the specification are subject to change without notice.

TIS CONTROL PTY LIMITED
SA, AUSTRALIA

TIS CONTROL LIMITED
Wanchai, Hong Kong

TIS RADAR SENOR

Celling Mount Occupancy Sensor

Model: OS-MMV2-IC



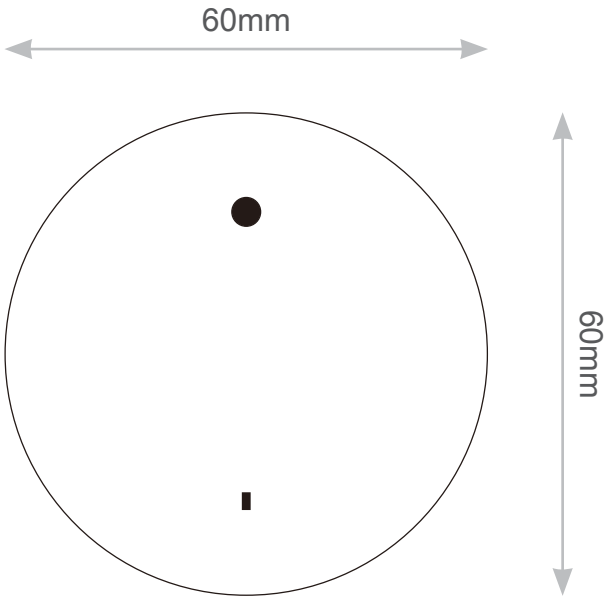

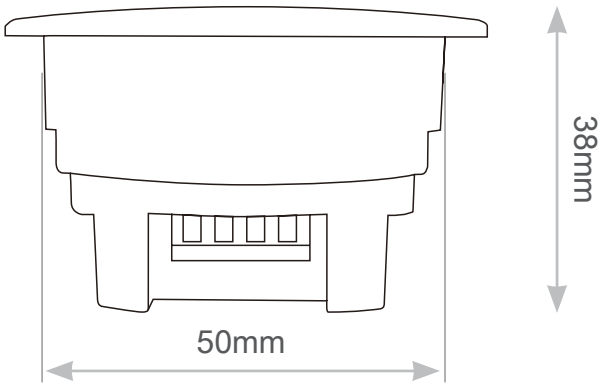

Copyright © 2025 TIS, All Rights Reserved
TIS Logo is registered trademark of TIS CONTROL.
All of the specification are subject to change without notice.

TIS CONTROL PTY LIMITED
SA, AUSTRALIA

TIS CONTROL LIMITED
Wanchai, Hong Kong